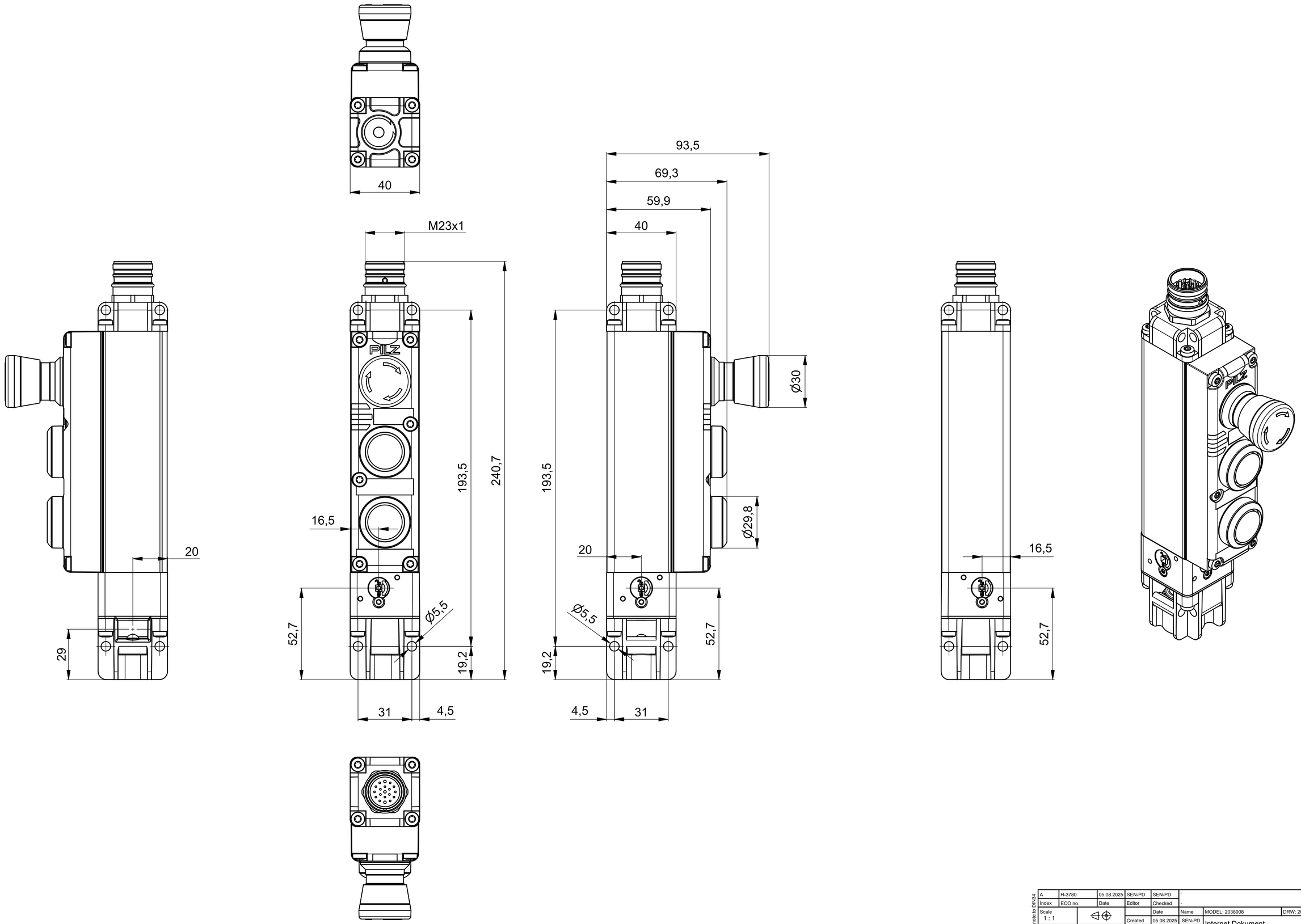

A	H-3780	05.08.2025	SEN-PD	SEN-PD	-		
Index	ECO no.	Date	Editor	Checked	-		
Scale 1 : 1				Date	Name	MODEL: 2038008	DRW: 2038002
			Created	05.08.2025	SEN-PD	Internet Dokument internet document PSENmg1-A-xxxxx-Lxxx-Ux-U	PILZ
Material - -			Checked	15.08.2025	SEN-PD		
			Norm	-	-		
			All dimensions are in mm				
Surface - -			Unspecified tolerance			Doc.-No. 2038002	Page 1
						Mat.-No. -	of 1

Observe protection note to DIN34