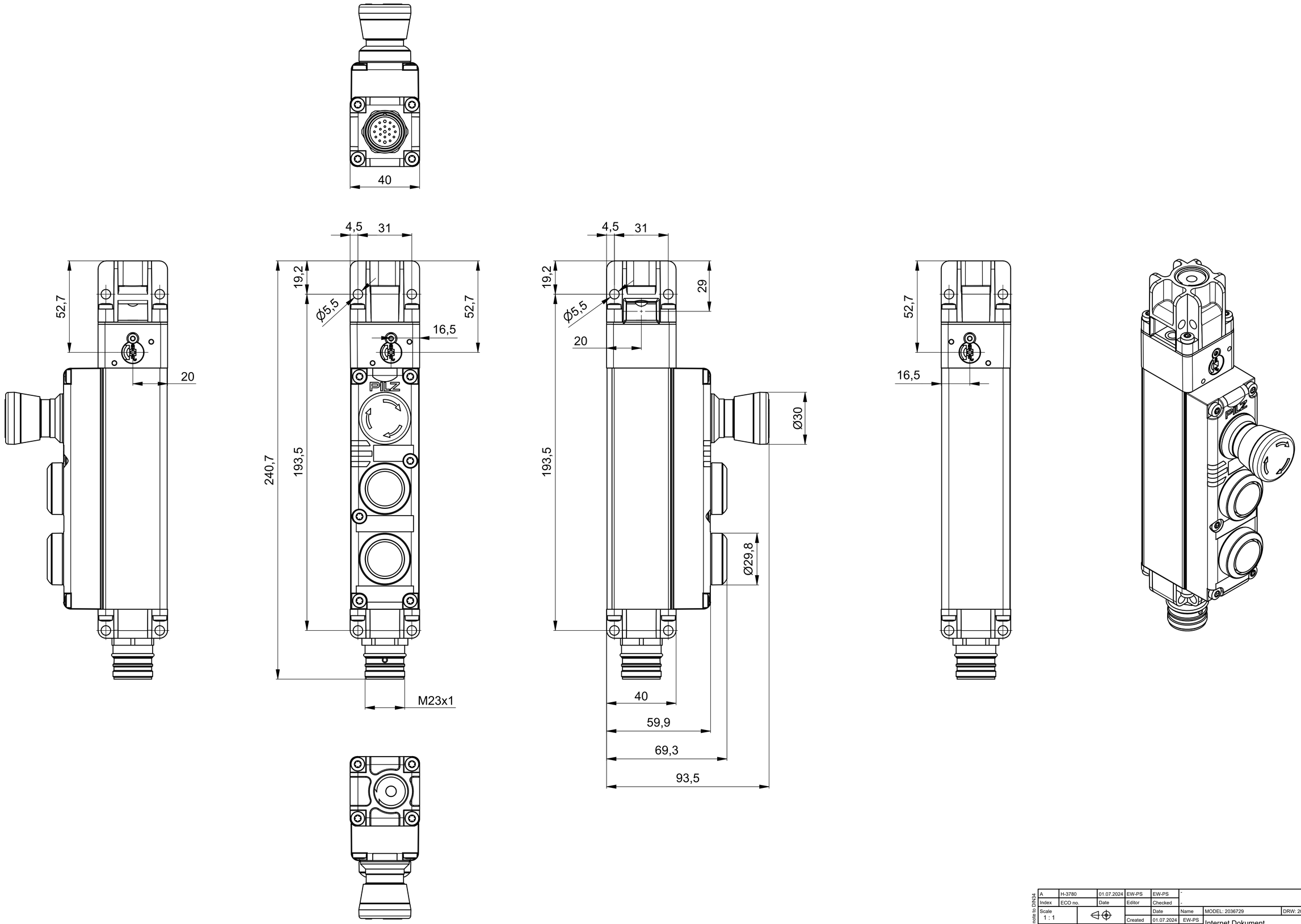

A	H-3780	01.07.2024	EW-PS	EW-PS	-		
Index	ECO no.	Date	Editor	Checked	-		
Scale 1 : 1				Date	Name	MODEL: 2036729	DRW: 2036728
			Created	01.07.2024	EW-PS	Internet Dokument internet document PSENmg1-A-xxxxx-Lxxx-Ux	PILZ
Material - -			Checked	02.07.2024	EW-PS		
			Norm	-	-		
			All dimensions are in mm				
Surface - -			Unspecified tolerance			Doc.-No. 2036728	Page 1
						Mat.-No. -	of 1

Observe protection note to DIN34